To: DIGI-KEY

Issue No.	: CE-VHBA4-CE-0
Date of Issue	: August 20, 2007
Classification	: New , Changed

PRODUCT SPECIFICATION FOR APPROVAL

Product Description	: Aluminum Electrolytic Capacitor
Customer Part Number	:
Product Part Number	: V type HB series (High. temp. Pb free reflow type)
Country of Origin	: Japan
Marking of the Origin	: Printed on the packaging label
Applications	: It has the intention of being used for a general electronic circuit given in a notice matter (limitation of a use). On the occasion of application other than the above, even person in charge of our company needs to inform in advance.

※ If you approve this specification, please fill in and singn the below and return 1copy to us.

Approval No	:
Approval Date	:
Excecuted by	: _____ (signature)
Title	:
Dept.	:

Capacitor Business Unit
Panasonic Electronic Devices Co.,Ltd.

25.Kohata-nishinaka..Uji City,
Kyoto, 611-8585, Japan
Phone (774)32-1111

Phone :+81-774-33-3209(Direct)
Fax :+81-774-32-3189

Prepared by	: Engineering Group Aluminum Engineering Team
Contact Person	:
Singnature	_____
Name(Prrint)	Haruhiko Handa
Title	: Engineer
Checked by	:
Singnature	_____
Name(Prrint)	Hisao Nagara
Title	: Manager
Authorized by	:
Singnature	_____
Name(Prrint)	Shigeyoshi Iwamoto
Title	: General Manager of Engineering

No.3830551-8Q91Y

Panasonic

Revision Record

Customer Part No.	Product Part No.	Note
	V type HB series (High. temp. Pb free reflow type)	

No.	Pg	Revised Date	Enforce Date	Contents	Approval	Accepted No.
Initial Date		August	20, 2007	New	S. Iwamoto	
△						
△						
△						
△						
△						
△						
△						
△						
△						
△						
△						
△						
△						
△						
△						
△						
△						
△						
△						
△						

Contents

Notice matter

◆ Law and regulation which are applied

・This product complies with the RoHS Directive (Restriction of the use of certain Hazardous Substances in electrical and electronic equipment (DIRECTIVE 2002/95/EC).

・No Ozone Depleting Chemicals(ODC's), controlled under the Montreal Protocol Agreement, are used in producing this product.

・We do not PBBs or PBDEs as brominated flame retardants.

・All the materials that are used for this product are registered as "Known Chemicals" in the Japanese act "Law Concerning the Examination and Regulation of Manufacture, etc. of Chemical Substances".

・Export procedure which followed export related regulations, such as foreign exchange and a foreign trade method, on the occasion of export of this product Thank you for your consideration.

◆ Limitation of a use

・This capacitor is designed to be used for electronics circuits such as audio/visual equipment, home appliances, computers and other office equipment, optical equipment, measuring equipment and industrial robots.
High reliability and safety are required [be / a possibility that incorrect operation of this product may do harm to a human life or property] more. When use is considered by the use, the delivery specifications which suited the use separately need to be exchanged.

◆ Unless otherwise specified, the product shall conform to JIS 5101-18-2

◆ Country of origin : JAPAN

◆ Manufacturing factory : Panasonic Electronic Devices Yamaguchi Co.,Ltd.
1285, Aza-Sakutaguchi, Oaza-Asada,Yamaguchi City, Yamaguchi
753-8536 Japan

1. Scope

Fixed capacitors for use in electronic equipment, Surface Mount Type Aluminum electrolytic capacitors with non-solid electrolyte.

2. Parts number

EEE	HB	○○	○○○	△A	□
2-1	2-2	2-3	2-4	2-5	2-6

・2-1 Surface Mount Type Aluminum Electrolytic Capacitor (Lead-Free Products.)

・2-2 HB series

・2-3 Rated Voltage Code

Voltage code	0J	1A	1C	1E	1V	1H
Rated voltage(V.DC)	6.3	10	16	25	35	50

・2-4 Capacitance Code: Indicate capacitance In μF by 3 letters. The first 2 figures are actual values and the third denotes the number of zeros.
“R” denotes the decimal point and all figures are the actual number with "R".

ex. 0.1μF → R10, 1μF → 1R0, 10μF → 100, 100μF → 101, 1000μF → 102

・2-5 A : High temperature reflow type
UA : High temperature reflow type miniaturization product
XA : High temperature reflow type size D8
YA : High temperature reflow type miniaturization product of type “XA”

* Due to the method used by our company to express taping part numbers, we have eliminated "1" from the taping part numbers.

ex. EEEHB0J221UAP → EEEHBJ221UAP , EEEHB1C470XAP → EEEHBC470XAP
EEEHB1V470YAP → EEEHBV470YAP

・2-6 Suffix Code for Appearance: Taping Code

R	12.0mm width (Size code "B～C")
P	16.0mm width (Size code "D～E")
	24.0mm width (Size code "F～G")

See the drawing in item 11 for the polarity alignment.

Parts lists (Standard)

Size Code	Taping Part No.	R.V. [V.DC]	Cap. [μF] (120Hz) (20℃)	Tangent of Loss Angle (tanδ) max. (120Hz) (20℃)	Leakage Current [μA] max. (After 2min.)	Rated Ripple Current [mA rms] max. (120Hz) (105℃)
B	EEEHB0J220AR	6.3	22	0.30	3.0	26
B	EEEHB0J330AR	6.3	33	0.30	3.0	29
C	EEEHB0J470AR	6.3	47	0.30	3.0	46
D	EEEHB0J101AP	6.3	100	0.30	6.3	71
F	EEEHB0J221AP	6.3	220	0.35	13.8	150
F	EEEHB0J331AP	6.3	330	0.35	20.7	230
C	EEEHB1A330AR	10	33	0.26	3.3	43
D	EEEHB1A680AP	10	68	0.22	6.8	70
E	EEEHB1A101AP	10	100	0.26	10.0	110
F	EEEHB1A221AP	10	220	0.26	22.0	160
G	EEEHB1A471AP	10	470	0.26	47.0	270
B	EEEHB1C100AR	16	10	0.16	3.0	28
C	EEEHB1C220AR	16	22	0.16	3.5	39
D	EEEHB1C330AP	16	33	0.16	5.2	65
D	EEEHB1C470AP	16	47	0.16	7.5	70
D8	EEEHBC470XAP	16	47	0.16	7.5	84
F	EEEHB1C101AP	16	100	0.20	16.0	120
G	EEEHB1C221AP	16	220	0.20	35.2	210
G	EEEHB1C331AP	16	330	0.20	52.8	230
G	EEEHB1C471AP	16	470	0.20	75.2	340
B	EEEHB1E4R7AR	25	4.7	0.14	3.0	22
B	EEEHB1E6R8AR	25	6.8	0.14	3.0	25
C	EEEHB1E100AR	25	10	0.14	3.0	28
D	EEEHB1E220AP	25	22	0.14	5.5	55
D	EEEHB1E330AP	25	33	0.14	8.2	65
E	EEEHB1E470AP	25	47	0.16	11.7	91
F	EEEHB1E101AP	25	100	0.16	25.0	130
G	EEEHB1E221AP	25	220	0.16	55.0	190
G	EEEHB1E331AP	25	330	0.16	82.5	220

Parts lists (Standard)

Size Code	Taping Part No.	R.V. [V.DC]	Cap. [μF] (120Hz) (20℃	Tangent of Loss Angle (tanδ) max. (120Hz) (20℃)	Leakage Current [μA] max. (After 2min.))	Rated Ripple Current [mA rms] max. (120Hz) (105℃)
B	EEEHB1V4R7AR	35	4.7	0.12	3.0	21
C	EEEHB1V100AR	35	10	0.12	3.5	28
D	EEEHB1V220AP	35	22	0.12	7.7	55
E	EEEHB1V330AP	35	33	0.14	11.5	84
F	EEEHB1V470AP	35	47	0.14	16.4	98
G	EEEHB1V101AP	35	100	0.14	35.0	160
B	EEEHB1HR10AR	50	0.1	0.12	3.0	1
B	EEEHB1HR22AR	50	0.22	0.12	3.0	2
B	EEEHB1HR33AR	50	0.33	0.12	3.0	3
B	EEEHB1HR47AR	50	0.47	0.12	3.0	5
B	EEEHB1HR68AR	50	0.68	0.12	3.0	7
B	EEEHB1H1R0AR	50	1	0.12	3.0	10
B	EEEHB1H2R2AR	50	2.2	0.12	3.0	16
B	EEEHB1H3R3AR	50	3.3	0.12	3.0	16
C	EEEHB1H4R7AR	50	4.7	0.12	3.0	23
C	EEEHB1H6R8AR	50	6.8	0.12	3.4	23
D	EEEHB1H100AP	50	10	0.12	5.0	35
E	EEEHB1H220AP	50	22	0.12	11.0	70
F	EEEHB1H330AP	50	33	0.12	16.5	91
G	EEEHB1H470AP	50	47	0.12	23.5	100

Parts lists (Miniaturization product)

Size Code	Taping Part No.	R.V. [V.DC]	Cap. [μF] (120Hz) (20℃)	Tangent of Loss Angle (tanδ) max. (120Hz) (20℃)	Leakage Current [μA] max. (After 2min.)	Rated Ripple Current [mA rms] max. (120Hz) (105℃)
B	EEEHBJ470UAR	6.3	47	0.50	3.0	26
C	EEEHBJ101UAR	6.3	100	0.50	6.3	42
D	EEEHBJ221UAP	6.3	220	0.50	13.8	80
E	EEEHBJ331UAP	6.3	330	0.50	20.7	180
F	EEEHBJ471UAP	6.3	470	0.50	29.6	230
G	EEEHBJ152UAP	6.3	1500	0.50	94.5	290
B	EEEHBA330UAR	10	33	0.30	3.3	23
D	EEEHBA100UAP	10	100	0.30	10.0	71
D	EEEHBA151UAP	10	150	0.50	15.0	64
E	EEEHBA221UAP	10	220	0.30	22.0	110
F	EEEHBA471UAP	10	470	0.35	47.0	220
B	EEEHBC220UAR	16	22	0.26	3.5	29.5
C	EEEHBC470UAR	16	47	0.26	7.5	39
D	EEEHBC101UAP	16	100	0.26	16.0	70
F	EEEHBC221UAP	16	220	0.20	35.2	150
F	EEEHBC471UAP	16	470	0.40	75.2	240
B	EEEHBE100UAR	25	10	0.16	3.0	28
C	EEEHBE330UAR	25	33	0.20	8.2	50
D	EEEHBE470UAP	25	47	0.20	11.7	65
E	EEEHBE101UAP	25	100	0.16	25.0	100
F	EEEHBE221UAP	25	220	0.30	55.0	130
F	EEEHBE331UAP	25	330	0.30	82.5	130
G	EEEHBE471UAP	25	470	0.30	117.5	230
B	EEEHBV6R8UAR	35	6.8	0.12	3.0	25
D8	EEEHBV470YAP	35	47	0.20	16.4	98
E	EEEHBV470UAP	35	47	0.18	16.4	91
F	EEEHBV101UAP	35	100	0.20	35.0	98
G	EEEHBV221UAP	35	220	0.14	77.0	180
D	EEEHBH220UAP	50	22	0.14	11.0	35
D8	EEEHBH470YAP	50	47	0.12	23.5	63
F	EEEHBH470UAP	50	47	0.12	23.5	95
G	EEEHBH101UAP	50	100	0.12	50.0	250
G	EEEHBH221UAP	50	220	0.18	110.0	150

Can Size [Size code] (Standard)

Cap.(μF) \ V.DC	6.3	10	16	25	35	50
0.1						B
0.22						B
0.33						B
0.47						B
0.68						B
1						B
2.2						B
3.3						B
4.7				B	B	C
6.8				B		C
10			B	C	C	D
22	B		C	D	D	E
33	B	C	D	D	E	F
47	C		D , D8	E	F	G
68		D				
100	D	E	F	F	G	
220	F	F	G	G		
330	F		G	G		
470		G	G			

Can Size [Size code] (Miniaturization product)

Cap.(μF) \ V.DC	6.3	10	16	25	35	50
6.8					B	
10				B		
22			B			D
33		B		C		
47	B		C	D	D8 , E	D8 , F
68						
100	C	D	D	E	F	G
150		D				
220	D	E	F	F	G	G
330	E			F		
470	F	F	F	G		
1500	G					

[mm]

Size Code B: φ4×5.8L
C: φ5×5.8L
D: φ6.3×5.8L
D8: φ6.3×7.7L
E: φ8×6.2L
F: φ8×10.2L
G: φ10×10.2L

3. Dimensions

[mm]

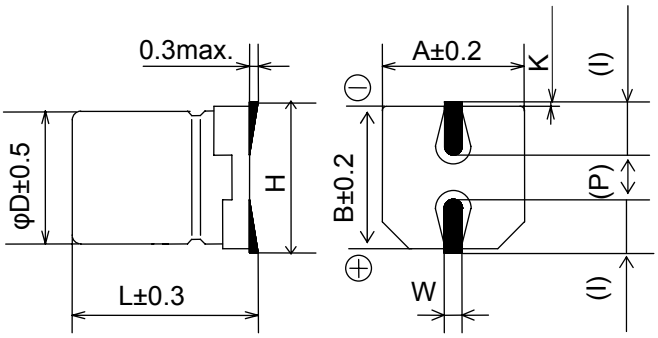

( ) Reference size

[mm]

Size Code	D	L	A,B	H	I	W	P	K
B	4.0	5.8	4.3	5.5max	1.8	0.65±0.1	1.0	$0.35^{+0.15}_{-0.20}$
C	5.0	5.8	5.3	6.5max	2.2	0.65±0.1	1.5	$0.35^{+0.15}_{-0.20}$
D	6.3	5.8	6.6	7.8max	2.6	0.65±0.1	1.8	$0.35^{+0.15}_{-0.20}$
D8	6.3	7.7	6.6	7.8max	2.6	0.65±0.1	1.8	$0.35^{+0.15}_{-0.20}$
E	8.0	6.2	8.3	9.5max	3.4	0.65±0.1	2.2	$0.35^{+0.15}_{-0.20}$
F	8.0	10.2	8.3	10.0max	3.4	0.90±0.2	3.1	0.70±0.2
G	10.0	10.2	10.3	12.0max	3.5	0.90±0.2	4.6	0.70±0.2

4. Constructions

4-1 Inside Construction

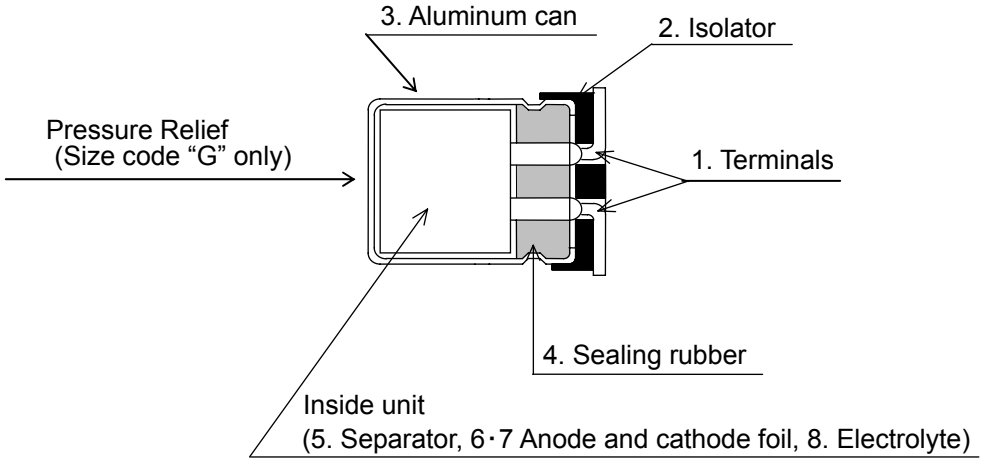

4-2 Construction parts

	Parts	Materials		Parts	Materials
1	Terminal	Bi contained tin plated Tinned Copper-Clad Steel wire	5	Separator	Cellulose
2	Isolator	Thermo-plastic Resin	6	Anode Foil	High Purity Aluminum Foil
3	Aluminum Can	Aluminum	7	Cathode Foil	Aluminum Foil
4	Sealing Rubber	Synthetic rubber (IIR)	8	Electrolyte	Organic Solvent,Organic Acid (No Quaternary Salt)

5. Marking

Marking Color : BLACK

Following items shall be marked on the body of Capacitor.

a) Rated Voltage Mark
b) Capacitance
c) Negative Polarity
d) Series Mark
e) Lot No. (It indicates to Lot No. System)
f) Mark for Lead-Free Products.

Rated Voltage Mark

j	6.3V
A	10V
C	16V
E	25V
V	35V
H	50V

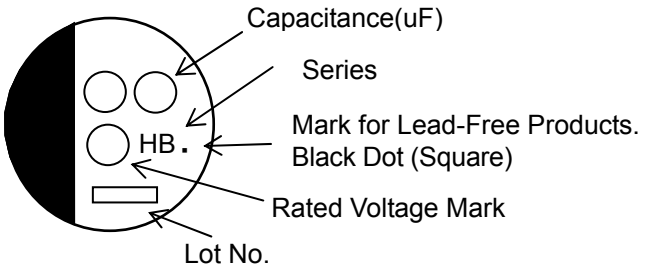

A lot No. shall be given on the bottom of a case in the following way.
Size Code (B～G)

6	A	8

Indicating that the product was produced in Aug. 2006, under a line A.

- 8 — month(1 to 9 and O for October, N for November, D for December)
- A — line code in alphabet (A to Z)
- 6 — last number of year(2006=6)

production year	production month	
6:2006	1:January	7:July
7:2007	2:February	8:August
8:2008	3:March	9:September
	4:April	O:October
Indicating with the last digit or the	5:May	N:November
last 2 digits of a year.	6:June	D:December

6. Standard rating

№	Item	Ratings							
1	Category Temperature Range	-40℃ ～ +105℃							
2	Rated Voltage Range	6.3 V.DC ～ 50 V.DC							
3	Capacitance Range	0.1 μF ～ 1500 μF							(120Hz 20℃)
4	Capacitance Tolerance	±20%							(120Hz 20℃)
5	Surge Voltage	R.V.	6.3	10	16	25	35	50	
	(V.DC)	S.V.	8	13	20	32	44	63	
6	Rated Ripple Current	Part lists and Table 3							

7. Performance Characteristics

No	Item		Performance Characteristics	Test
1	Leakage Current		≦ I=0.01CV or 3μA whichever is the greater. (I:Leakage current C:Capacitance V:Rated voltage)	Series Resistor : 1000Ω±10Ω Applied Voltage : Rated voltage Measuring : After 2 minutes
2	Capacitance		Within the specified capacitance tolerance.	Measuring Frequency : 120Hz±20% Measuring Circuit : Equivalent series circuit Measuring Voltage : +1.5 V.DC ～ +2 V.DC (≦0.5 V for A.C.)
3	Tangent of Loss Angle (tan δ)		Less than tha table 1 value of item 6.	Measuring Frequency : 120Hz±20% Measuring Circuit : Equivalent series circuit Measuring Voltage : +1.5 V.DC ～ +2 V.DC (≦0.5 V for A.C.)
4	Charact-eristics at High and Low Tem-perature	Step 2	Impedance Ratio: Less than the table 2 value of item 8 ratio against step 1.	Step / Test Temperature(℃) / Time 1 / 20±2 / — 2 / -25±3,-40±3 / 30 min. 3 / 20±2 / 10 min.～15 min. 4 / 105±2 / 30 min. 5 / 20±2 / 10 min.～15 min. Impedance should be measured 120Hz±10%.
		Step 4	Leakage Current: ≦800% of the value of item 7.1. Capacitance Change: Within ±25% of the value in step 1. Tangent of Loss Angle (tanδ): ≦the value of item 7.3.	
5	Surge		Leakage Current: ≦the value of item 7.1. Capacitance Change: Within ±15% of initial measured value. Tangent of Loss Angle (tanδ): ≦the value of item 7.3. Appearance: No significant change can be observed.	Test temperature : 15℃～35℃ Series Protective Resistance : $R = \frac{100 \pm 50}{C}$ (R: Protective resistance(kΩ) C: Capacitance(μF)) Test voltage : Surge voltage item 6.5 Applied voltage 1000 cycles of 30s±5s "ON"and 5 min 30 s"OFF".
6	Robustness of Termination (Tensile)		There is no damage or breakage after test.	After fixing the capacitors, the terminals are pulled in a vertical direction. Load is gradually increased until it reached the value specified below and held for 10 seconds. Pull Strength / 10N Keep time / 10s±1s

No	Item	Performance Characteristics	Test
7	Vibration	Capacitance : During test, measured value shall be stabilized.(Measured several times within 30 min. before completion of test) Appearance : No significant change can be observed. Capacitance Change : Within ±5% of initial measured value.	Frequency : 10Hz～55Hz (1 minute per cycle.) Total amplitudes : 1.5 mm Direction and duration of vibration : It is done in the X,Y,Z axis direction for 2 hours each, with a total of 6 hours.
8	Solderability	More than 95% of the terminal surface shall be covered with new solder. (Exclude the cross-section of cutting lead edge.)	Solder Type : H60A,H60S,or H63A (JIS Z3282) Solder Temperature : 235℃±5℃ Immersing Time : 2s±0.5s Immersing Depth : Dip the terminals for Approx. 0.5mm～1mm thick Flux : Approx 25% rosin(JIS K5902) in Ethanol(JIS K8101)
9	Resistance to Soldering heat	Leakage Current : ≦the value of item 7.1. Capacitance Change : Within ±10% of initial measured value. Tangent of Loss Angle (tanδ) : ≦the value of item 7.3. Appearance : No significant change can be observed.	After reflow soldering (item 9) The capacitor shall be left at room temperature for before measurement.
10	Solvent Resistance of the Marking	There shall be no damage end legibly marked. Marking can be deciphered easily.	Class of Reagent : Isopropyl Alcohol Test Temperature : 20℃～25℃ Immersing time : 30s±5s
11	Damp Heat (steady state)	Leakage Current : ≦the value of item 7.1. Capacitance Change : Within ±15% of initial measured value. Tangent of Loss Angle (tanδ) : ≦120% the value of item 7.3. Appearance : No significant change can be observed.	Test Temperature : 40℃±2℃ Relative Humidity : 90%～95% Test Duration : 240hours±8hours After subjected to the test, the capacitors shall be left for 2 hours at room temperature and room humidity prior to the measurement.

No	Item	Performance Characteristics	Test
12	Pressure Relief (Size code "G" only)	Pressure relief shall be operated without any hazardous expulsion or emission of flame. No emission of gas after 30 minutes of the voltage application also meets the specification.	・A.C. Current Method

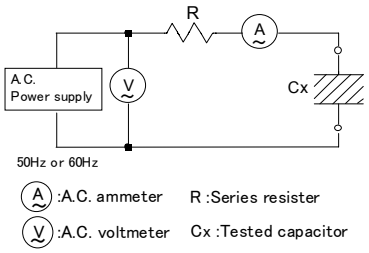

Applied Voltage :
A.C. voltage equals to R.V. x 0.7 or 250 V(rms) whichever is smaller.

Capacitance (μF)	D.C. resistance(Ω)
≦1	1000±100
＞1 ≦10	100±10
＞10 ≦100	10±1
＞100 ≦1000	1±0.1
＞1000 ≦10000	0.1±0.01
＞10000	※

* When capacitance is over 10000μF,the value of series resistance equals to the half of the tested capacitor's impedance.

・Reverse Voltage Method

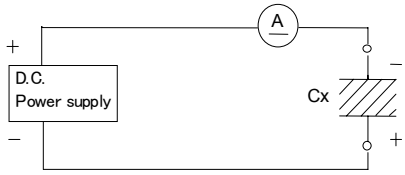

A :D.C. ammeter Cx :Tested capacitor

Nominal Diamether (mm)	D.C. Current(A)
≦ 22.4	1 (const)
＞ 22.4	10 (const)

No	Item	Performance characteristics	Test
13	Endurance	Leakage Current : ≦the value of item 7.1. Capacitance change : Within ±20% of initial measured value. (·16V.DC or less : Within ±25% ·Miniaturization product : Within ±35%) Tangent of Loss Aangle (tanδ): ≦200% of the value of item 7.3. Appearance : No significant change can be observed.	Test Temperature : 105℃±2℃ Test Duration : 2000^{+72}_{0} hours Applied Voltage : Rated voltage After subjected to the test, the capacitors shall be left at room temperature and room humidity for 2 hours prior to the measurement.
14	Shelf Life	Leakage Current : ≦the value of item 7.1. Capacitance Change : Within ±20% of initial measured value. (·16V.DC or less : Within ±25% ·Miniaturization product : Within ±35%) Tangent of Loss Angle (tanδ) : ≦200% of the value of item 7.3. Appearance : No significant change can be observed.	Test Temperature : 105℃±2 ℃ Test Duration : 1000^{+48}_{0} hours After subjected to the test, D.C. rated voltage shall be applied to the capacitors for 30 minutes as post-test treatment after left at the room temperature and humidity for 2 hours prior to the measurement.

* Voltage treatment : The rated voltage shall be applied to the capacitors, which are connected to series protective resistors (1000Ω ±10Ω), for 30 minutes as a posttest treatment (performing discharge).

8. Other Characteristics

■ Table 1. Characteristics at low temperature Impedance ratio (at 120Hz)

	R.V.(V.DC)	6.3	10	16	25	35	50
Standard	Z(-25℃)/Z(20℃)	4	3	2	2	2	2
	Z(-40℃)/Z(20℃)	8	6	4	4	3	3
Miniaturization product	Z(-25℃)/Z(20℃)	4	3	2	2	2	2
	Z(-40℃)/Z(20℃)	10	8	6	6	4	4

■ Table 2. Frequency Correction Factor of Rated Ripple Current

	Frequency (Hz)			
	50,60	120	1k	10k～
coefficient	0.70	1.0	1.3	1.7

9. Reflow Soldering Temperature Profile

After the capacitor is subjected to the specified reflow soldering, (see the temperature profile below), it shall Meet the condition stated in the item 7, No.9.

<Reflow soldering condition>

The temperature shall be measured with thermal couple (type K, φ0.1mm) which shall be placed and fixed on the top of capacitor body.

Maximum Permissible Reflow Soldering Temperature Profile

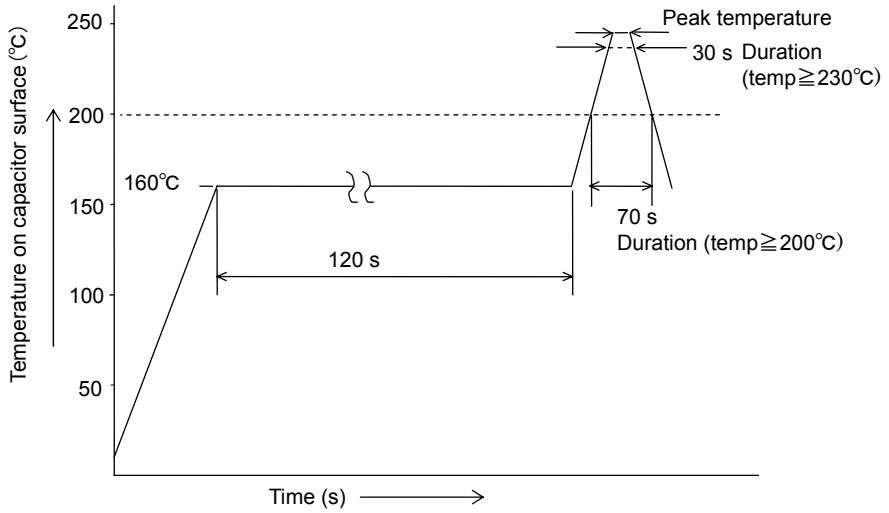

Can Size (SiZe code)	Peak temperature	Duration	Duration (temp≧230℃)	Duration (temp≧200℃)	Reflow frequency
φ4～φ6.3 (B, C, D, D8)	260℃ (255℃)	(temp≧250℃) 5 s (10 s)	30 s	70 s	2
φ8～φ10 (E, F, G)	250℃	(temp≧240℃) 10 s	30 s	70 s	2

For φ4 to φ6.3, our recommended reflow condition is either of following two conditions.

(1) Peak temperature 260ºC,5s(temp.≧250℃)

(2) Peak temperature 255ºC,10s(temp.≧250℃)

Two times of reflow

(The 2nd reflow must be done when the capacitor becomes normal condition regarding temperature.)

* Soldering Method : I.R. or I.R. + heated air.
(VPS Method is not Available.)

10. Taping

10-1 Carrier Tape [mm]

Size code B

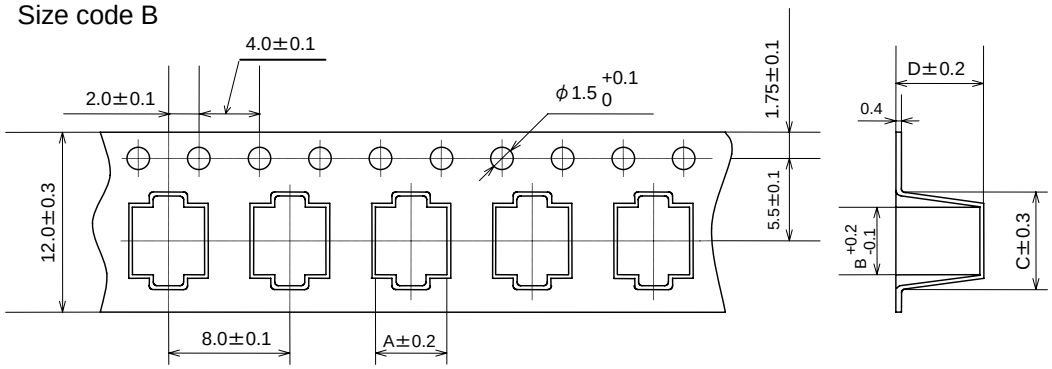

Size code C

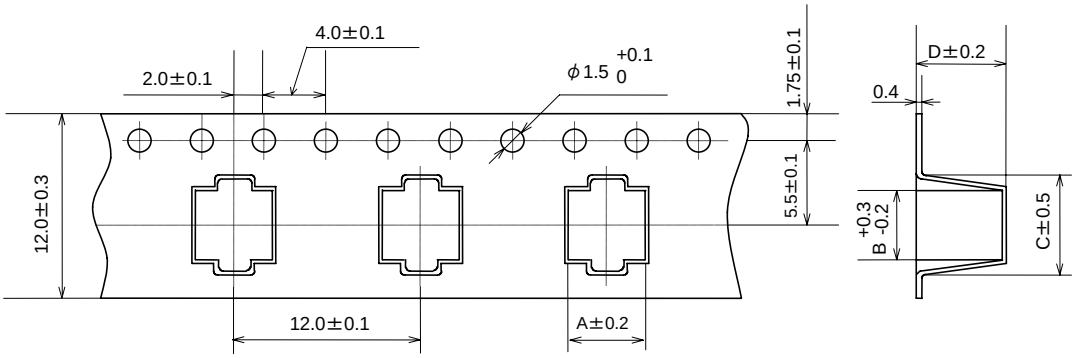

Size code D , D8

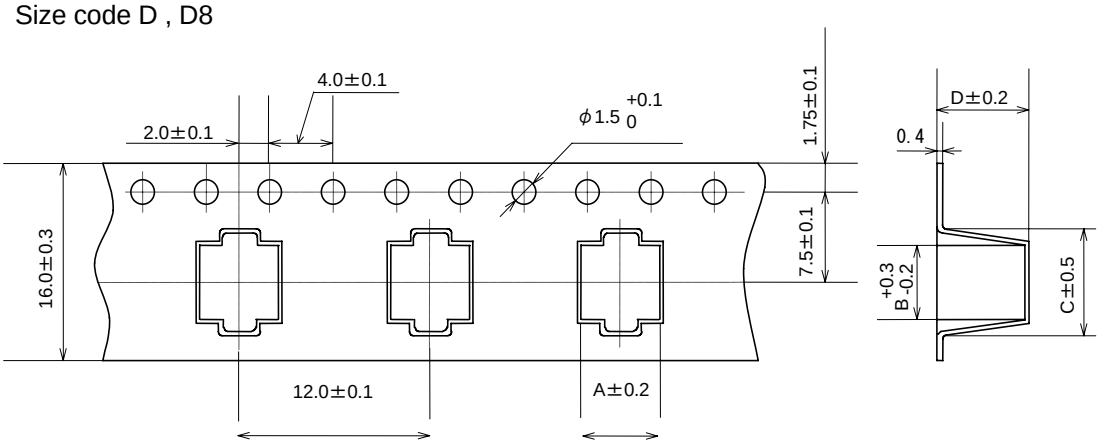

[mm]

Size Code	A	B	C	D
B	4.7	4.6	6.5	6.2
C	5.7	5.7	8.0	6.4
D	7.0	7.0	9.0	6.4
D8	7.0	7.0	9.0	8.4

* Dimensions of A and B are measured at the bottom of the embossed part.

Size code E

[mm]

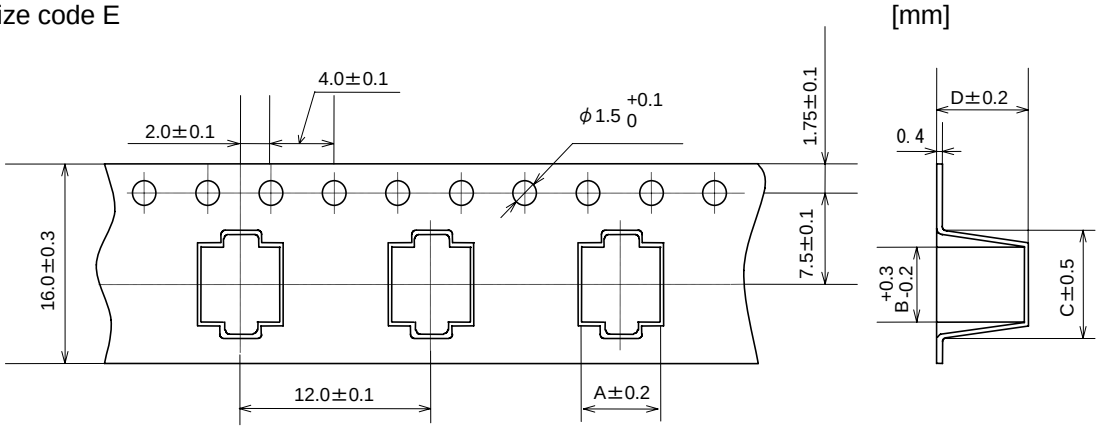

Size code F,G

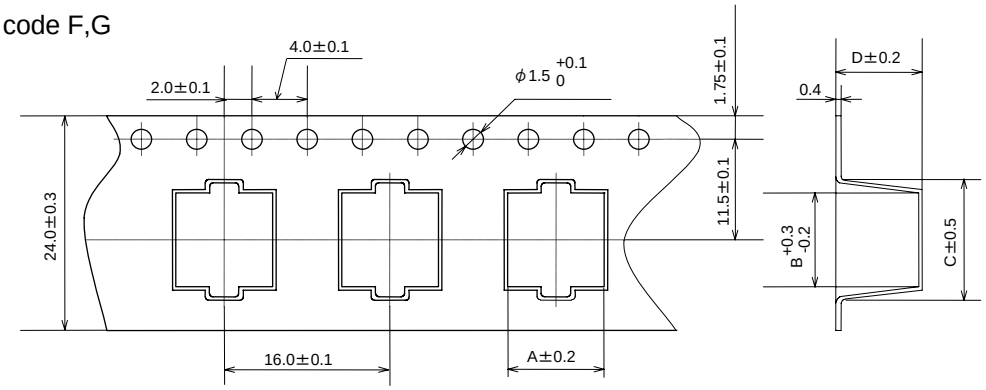

[mm]

Size Code	A	B	C	D
E	8.7	8.7	11.4	6.8
F	8.7	8.7	12.5	11.0
G	10.7	10.7	14.5	11.0

* Dimensions of A and B are measured at the bottom of the embossed part.

10-2 Reel

[mm]

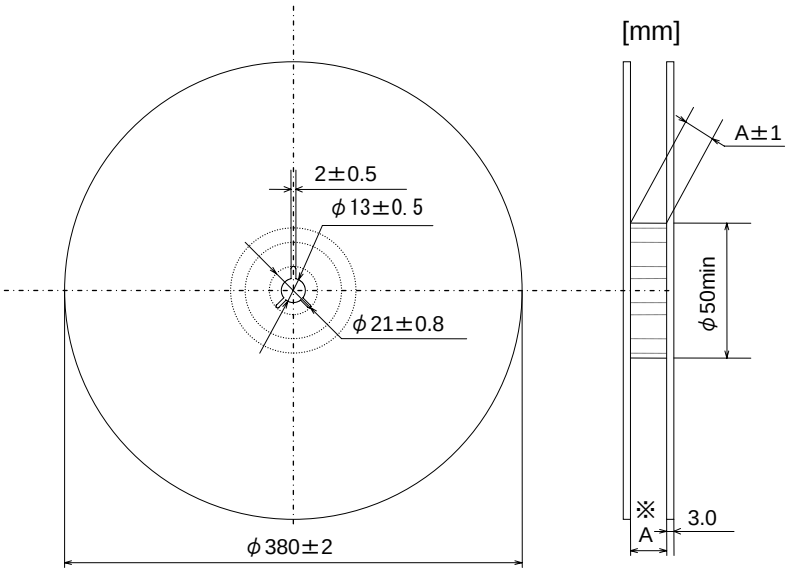

[mm]

Size Code	Reel Width(A)
B	14
C	14
D	18
D8	18
E	18
F	26
G	26

※ The A dimension at the edge of flange shall be less than 1.5 times of the specified value.

11. Details of Carrier Tape

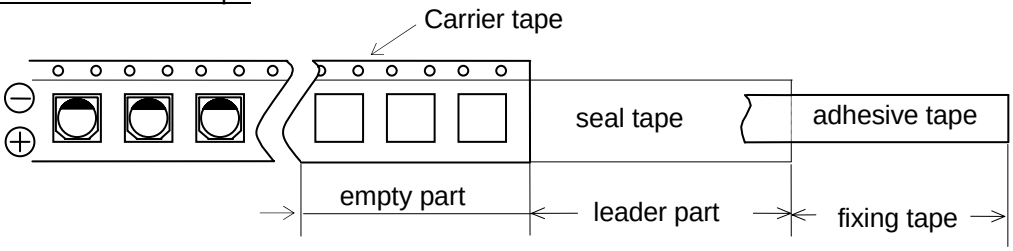

(1)
a. Last reeling empty part of carrier tape shall be more than 10 cm.
b. Leader part of seal tape shall be more than 20 cm.
c. First reeling Empty part of carrier tape shall be more than 10 cm.
d. Adhesive tape fixing the end of the leader part shall be approx, 10 cm.

(2) Deviation between carrier tape and seal tape.
a. Deviation between carrier tape and seal tape shall be less than 0.5 mm.

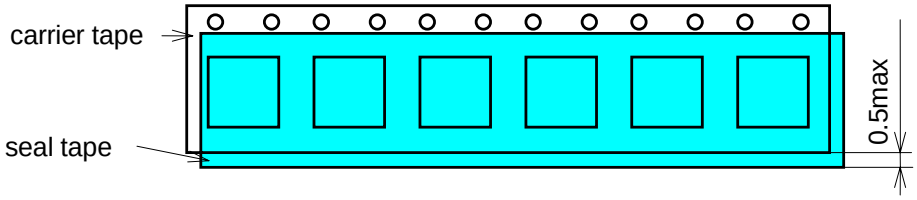

b. Seal tape shall not cover on the feeding holes more than 0.75 mm.

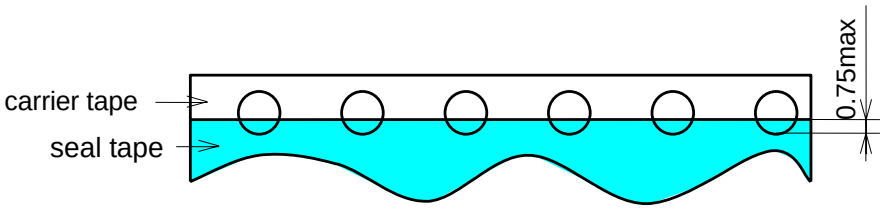

12. Adhesion Test

Reasonable pulling strength: 0.1N～0.7 N
Pulling speed: 300 mm / min

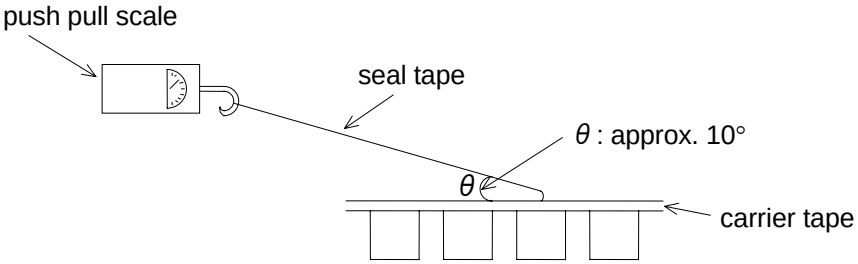

13. Packing Style

(1) Carrier tape shall be reeled inside. (seal tape shall be outside)
(2) End of the tape shall be inside to the reel physically as shown in the below figure and leader part of seal tape shall not be attached.

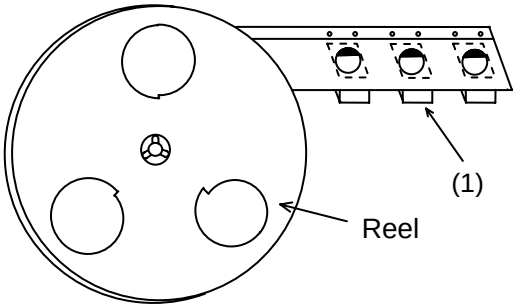

14. Dimensions of Outer Carton Box

Dimensions of outer carton box are subject to change without Notice for adjustment to Reel Size.

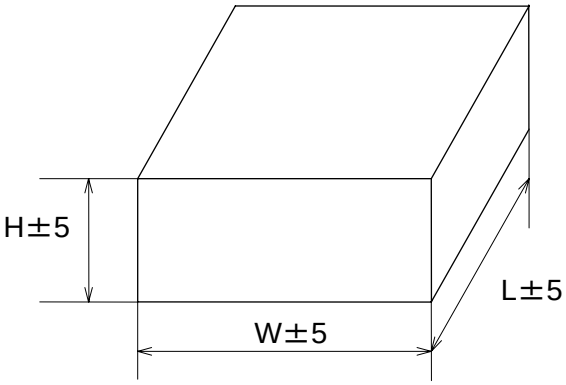

[mm]

Size Code	H	W,L
B	220	395
C	220	395
D	250	395
D8	250	395
E	250	395
F	220	395
G	220	395

15. Packaging quantity

Size Code	One reel (pcs.)	One outer carton box (reel)	Total quantity (pcs.)
B	2000	10	20000
C	1000	10	10000
D	1000	10	10000
D8	900	10	9000
E	1000	10	10000
F	500	6	3000
G	500	6	3000

* Let an order unit be 1 reel unit.

16.Package Label Example

Label information on the Packaging Box

The label has following information in English

a) Rated Voltage, Capacitance
b) Manufacturer's Trademark
c) Part Number
d) Packing Quantity
e) Serial No.
f) Manufacturer's Name
g) Country of Origin

16-1 A display to a reel

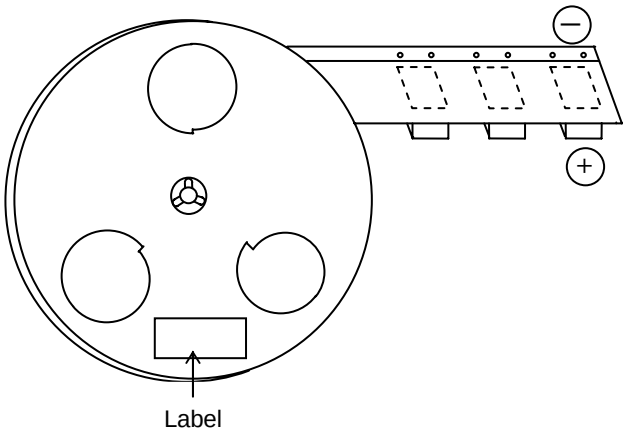

*The example of a label

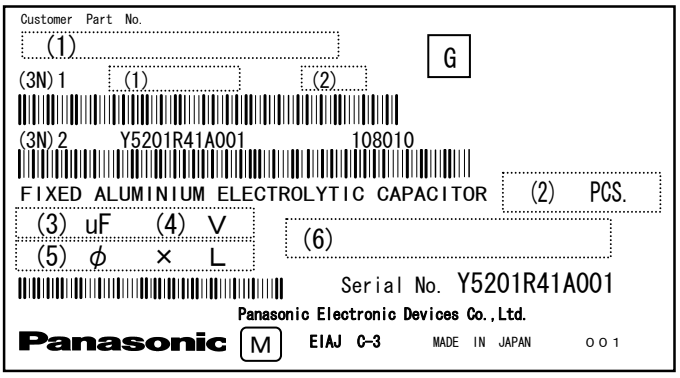

16-2 Outer Box

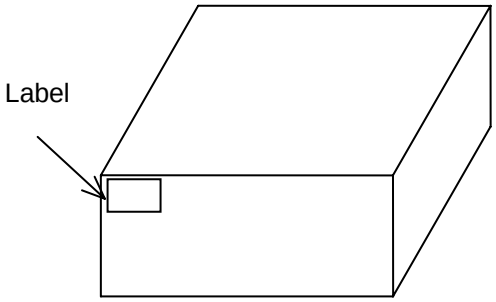

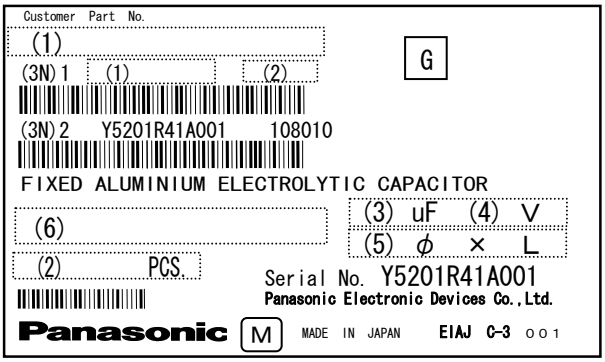

Contents of label description

(1) Customer Part No.
(2) Quantity
(3) Rated Capacitance
(4) Voltage
(5) Can Size
(6) Product Part No.

* This specification guarantees the quality and performance of the product as individual components.
Before use, check and evaluate their compatibility with installed in your products.
* Do not use the products beyond the specifications described in this document.
* Install the following systems for a failsafe design to ensure safety if these products are to be used in equipment where a defect in these products may cause the loss of human life or other signification damage, such as damage to vehicles (automobile, train, vessel), traffic lights, medical equipment, aerospace equipment, electric heating appliances, combustion/ gas equipment, rotating equipment, and disaster/crime prevention equipment.
  ・The system is equipped with a protection circuit and protection device.
  ・The system is equipped with a redundant circuit or other system to prevent an unsafe status in the event of a single fault.
* Before using the products, carefully check the effects on their quality and performance, and determined whether or not they can be used.
These products are designed and manufactured for general-purpose and standard use in general electronic equipment.
These products are not intended for use in the following special conditions.
  1. In liquid, such as Water, Oil, Chemicals, or Organic solvent
  2. In direct sunlight, outdoors, or in dust
  3. In vapor, such as dew condensation water of resistive element, or water leakage, salty air, or air with a high concentration corrosive gas, such as Cl2, H2S, NH3, SO2, or NO2
  4. In an environment where strong static electricity or electromagnetic waves exist
  5. Mounting or placing heat-generating components or inflammables, such as vinyl-coated wires, near these products
  6. Sealing or coating of these products or a printed circuit board on which these products are mounted, with resin and other material
  7. Using resolvent, water or water-soluble cleaner for flux cleaning agent after soldering.
  (In particular, when using water or a water-soluble cleaning agent, be careful not to leave water residues)
* Please arrange circuit design for preventing impulse or transitional voltage.
Do not apply voltage, which exceeds the full rated voltage when the capacitors receive impulse voltage, instantaneous high voltage, high pulse voltage etc.
* Electrolyte is used in the products. Therefore, misuse can result in rapid deterioration of characteristics and functions of each product.

1. Circuit Design

1.1 Operating Temperature and Frequency

Electrical parameters for electrolytic capacitors are normally specified at 20 ℃ temperature and 120 Hz frequency.
These parameters vary with changes in temperature and frequency. Circuit designers should take these changes into consideration.

(1) Effects of operating temperature on electrical parameters
  a) At higher temperatures, leakage current and capacitance increase while equivalent series resistance (ESR) decreases.
  b) At lower temperatures, leakage current and capacitance decrease while equivalent series resistance (ESR) increases.

(2) Effects of frequency on electrical parameters
  a) At higher frequencies, capacitance and impedance decrease while tan δ increases.
  b) At lower frequencies, heat generated by ripple current will rise due to an increase in equivalent series resistance (ESR).

1.2 Operating Temperature and Life Expectancy

(1) Expected life is affected by operating temperature. Generally, each 10 ℃ reduction in temperature will double the expected life.
Use capacitors at the lowest possible temperature below the upper category temperature.

(2) If operating temperatures exceed the upper category limit, rapid deterioration of electrical parameter will occur and irreversible damage will result.
Check for the maximum capacitor operating temperatures including ambient temperature, internal capacitor temperature rise due to ripple current, and the effects of radiated heat from power transistors, IC's or resistors.
Avoid placing components, which could conduct heat to the capacitor from the back side of the circuit board.

(3) The formula for calculating expected life at lower operating temperatures is as follows ;

$$L_2 = L_1 \times 2^{\frac{T_1 - T_2}{10}}$$

L_1 : Guaranteed life (h) at temperature, T_1 ℃
L_2 : Expected life (h) at temperature, T_2 ℃
T_1 : Upper category temperature (℃)
T_2 : Actual operating temperature, ambient temperature + temperature rise due to ripple current heating(℃)

(4) Please use according to the lifetime as noted in this specification. Using products beyond end of the lifetime may change characteristics rapidly, short-circuit, operate pressure relief vent, or leak electrolyte.

1.3 Common Application Conditions to Avoid

The following misapplication load conditions will cause rapid deterioration of a capacitor's electrical parameters.
In addition, rapid heating and gas generation within the capacitor can occur, causing the pressure relief vent to operate and resultant leakage of electrolyte. Under extreme conditions, explosion and fire ignition could result.
The leaked electrolyte is combustible and electrically conductive.

(1) Reverse Voltage
DC capacitors have polarity. Verify correct polarity before insertion. For circuits with changing or uncertain polarity, use DC bipolar capacitors. DC bipolar capacitors are not suitable for use in AC circuits.

(2) Charge / Discharge Applications
Standard capacitors are not suitable for use in repeating charge/discharge applications. For charge/ discharge applications, consult us with your actual application condition.

(3) Over voltage
Do not apply voltages exceeding the maximum specified rated voltage. Voltages up to the surge voltage rating are acceptable for short periods of time.
Ensure that the sum of the DC voltage and the superimposed AC ripple voltage does not exceed the rated voltage.

(4) Ripple Current
Do not apply ripple currents exceeding the maximum specified value. For high ripple current applications, use a capacitor designed for high ripple currents. In addition, consult us if the applied ripple current is to be higher than the maximum specified value.
Ensure that rated ripple currents that superimposed on low DC bias voltages do not cause reverse voltage conditions.

1.4 Using Two or More Capacitors in Series or Parallel

(1) Capacitors Connected in Parallel
The circuit resistance can closely approximate the series resistance of the capacitor, causing an imbalance of ripple current loads within the capacitors. Careful wiring methods can minimize the possible application of an excessive ripple current to a capacitor.

(2) Capacitors Connected in Series
Differences in normal DC leakage current among capacitors can cause voltage imbalances.
The use of voltage divider shunt resistors with consideration to leakage currents can prevent capacitor voltage imbalances.

1.5 Capacitor Mounting Considerations

(1) Double-Sided Circuit Boards
Avoid wiring pattern runs, which pass between the mounted capacitor and the circuit board.

(2) Land/ Pad Pattern

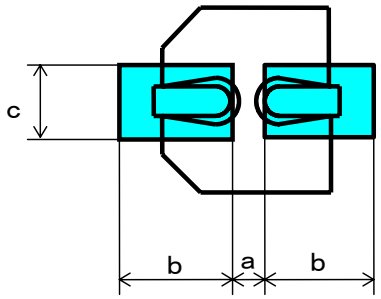

[Table of Board Land Size vs. Capacitor Size]

[mm]

Size/ Dimension	a	b	c
B (φ4)	1.0	2.5	1.6
C (φ5)	1.5	2.8	1.6
D (φ6.3)	1.8	3.2	1.6
D8 (φ6.3×7.7L)	1.8	3.2	1.6
E (φ8×6.2L)	2.2	4.0	1.6
F (φ8×10.2L)	3.1	4.0	2.0
G (φ10×10.2L)	4.6	4.1	2.0

Land space 

※ The land pattern and size shall be decided in consideration of mountability, solderbility and strength.

(3) Clearance for Case Mounted Pressure Relief (≧φ10 mm)
Capacitors with case mounted pressure relief require sufficient clearance to allow for proper pressure relief operation.
The minimum clearance are dependent on capacitor diameters as follows.
(Dia 10mm ～ Dia 16mm : 2mm minimum , Dia 18mm : 3mm minimum)

(4) Wiring Near the Pressure Relief (≧φ10 mm)
Avoid locating high voltage or high current wiring or circuit board paths above the pressure relief . Flammable, high temperature gas that exceeds 100 ˚ C may be released which could dissolve the wire insulation and ignite.

(5) Circuit Board Patterns Under the Capacitor
Avoid circuit board runs under the capacitor, as an electrical short can occur due to an electrolyte leakage.

1.6 Electrical Isolation of the Capacitor

Completely isolate the capacitor as follows.
・ Between the cathode and the case and between the anode terminal and other circuit paths.

1.7 Capacitor Sleeve

The laminate coating is intended for marking and identification purposes and is not meant to electrically insulate the capacitor.

2. Capacitor Handling Techniques

2.1 Considerations Before Using

(1) Capacitors have a finite life. Do not reuse or recycle capacitors from used equipment.
(2) Transient recovery voltage may be generated in the capacitor due to dielectric absorption.
If required, this voltage can be discharged with a resistor with a value of about 1kΩ.
(3) Capacitors stored for a long period of time may exhibit an increase in leakage current.
This can be corrected by gradually applying rated voltage in series with a resistor of approximately 1kΩ.
(4) If capacitors are dropped, they can be damaged mechanically or electrically. Avoid using dropped capacitors.
(5) Dented or crushed capacitors should not be used. The seal integrity can be damaged and loss of electrolyte/shortened life can result.

2.2 Capacitor Insertion

(1) Verify the correct capacitance and rated voltage of the capacitor.
(2) Verify the correct polarity of the capacitor before insertion.
(3) Verify the correct hole spacing and land pattern size before insertion to avoid stress on the terminals.
(4) For chip type capacitors, excessive mounting pressure can cause high leakage current, short circuit, or disconnection.

2.3 Manual Soldering

(1) Observe temperature and time soldering specifications or do not exceed temperature of 350 ℃ for 3 seconds or less.
(2) If a soldered capacitor must be removed and reinserted, avoid excessive stress on the capacitor leads.
(3) Avoid physical contacts between the tip of the soldering iron and capacitors to prevent or capacitor failure.

2.4 Reflow Soldering

(1) For reflow, use a thermal conduction system such as infrared radiation (IR) or hot blast.
Vapor heat transfer systems (VPS) are not recommended.
(2) Observe proper soldering conditions (temperature, time, etc.). Do not exceed the specified limits.
※ The Temperature on Capacitor top shall be measured by using thermal couple that is fixed firmly by epoxy glue.
(3) Two times of reflow (The 2nd reflow must be done when the capacitor becomes normal condition regarding temperature.)
(4) In our recommended reflow condition , the case discoloration and the case swelling might be slightly generated.
But please acknowledge that these two phenomena do not influence the reliability of the product.

2.5 Capacitor Handling after Soldering

(1) Avoid moving the capacitor after soldering to prevent excessive stress on the lead wires where they enter the seal.
(2) Do not use the capacitor as a handle when moving the circuit board assembly.
(3) Avoid striking the capacitor after assembly to prevent failure due to excessive shock.

2.6 Circuit Board Cleaning

(1) Circuit boards can be immersed or ultrasonically cleaned using suitable cleaning solvents for up to 5 minutes and up to 60 ℃ maximum temperatures. The boards should be thoroughly rinsed and dried.
The use of ozone depleting cleaning agents is not recommended for the purpose of protecting our environment.
(2) Avoid using the following solvent groups unless specifically allowed in the specification ;

- Halogenated cleaning solvents : except for solvent resistant capacitor types, halogenated solvents can permeate the seal and cause internal capacitor corrosion and failure.
  For solvent resistant capacitors, carefully follow the temperature and time requirements based on the specification. 1-1-1 trichloroethane should never be used on any aluminum electrolytic capacitor.
- Alkaline solvents : could react and dissolve the aluminum case.
- Petroleum based solvents : deterioration of the rubber seal could result.
- Xylene : deterioration of the rubber seal could result.
- Acetone : removal of the ink markings on the vinyl sleeve could result.

(3) A thorough drying after cleaning is required to remove residual cleaning solvents that may be trapped between the capacitor and the circuit board. Avoid drying temperatures, which exceed the Upper category temperature of the capacitor.
(4) Monitor the contamination levels of the cleaning solvents during use in terms of electrical conductivity, pH, specific gravity, or water content. Chlorine levels can rise with contamination and adversely affect the performance of the capacitor.
(5) Depending on the cleaning method, the marking on a capacitor may be erased or blurred.

Please consult us if you are not certain about acceptable cleaning solvents or cleaning methods.

2.7 Mounting Adhesives and Coating Agents

When using mounting adhesives or coating agents to control humidity, avoid using materials containing halogenated solvents.
Also, avoid the use of chloroprene based polymers.
Harden on dry adhesive or coating agents well lest the solvent should be left.

After applying adhesives or coatings, dry thoroughly to prevent residual solvents from being trapped between the capacitor and the circuit board.

2.8 Fumigation

In exporting electronic appliances with aluminum electrolytic capacitors, in some cases fumigation treatment using such halogen compound as methyl bromide is conducted for wooden boxes.
If such boxes are not dried well, the halogen left in the box is dispersed while transported and enters in the capacitors inside. This possibly causes electrical corrosion of the capacitors. Therefore, after performing fumigation and drying make sure that no halogen is left.
Don't perform fumigation treatment to the whole electronic appliances packed in a box.

3. Precautions for using capacitors

3.1 Environmental Conditions

Capacitors should not be stored or used in the following environments.

(1) Exposure to temperatures above the upper category or below the lower category temperature of the capacitor.
(2) Direct contact with water, salt water, or oil.
(3) High humidity conditions where water could condense on the capacitor.
(4) Exposure to toxic gases such as hydrogen sulfide, sulfuric acid, nitric acid, chlorine, Chlorine compound, Bromine, Bromine compound or ammonia.
(5) Exposure to ozone, radiation, or ultraviolet rays.
(6) Vibration and shock conditions exceeding specified requirements.

3.2 Electrical Precautions

(1) Avoid touching the terminals of a capacitor as a possible electric shock could result. The exposed aluminum case is not insulated and could also cause electric shock if touched.
(2) Avoid short circuiting the area between the capacitor terminals with conductive materials including liquids such as acids or alkaline solutions.

4. Emergency Procedures

(1) If the pressure relief of the capacitor operates, immediately turn off the equipment and disconnect from the power source. This will minimize an additional damage caused by the vaporizing electrolyte.
(2) Avoid contact with the escaping electrolyte gas, which can exceed 100 ℃ temperatures.
If electrolyte or gas enters the eye, immediately flush the eye with large amounts of water.
If electrolyte or gas is ingested by mouth, gargle with water.
If electrolyte contacts the skin, wash with soap and water.

5. Long Term Storage

Leakage current of a capacitor increases with long storage times. The aluminum oxide film deteriorates as a function of temperature and time. If used without reconditioning, an abnormally high current will be required to restore the oxide film. This surge current could cause the circuit or the capacitor to fail. After one year, a capacitor should be reconditioned by applying the rated voltage in series with a 1000 Ω current limiting resistor for a time period of 30 minutes.

5.1 Environmental Conditions

(1) Exposure to temperatures above the upper category or below the lower category temperature of the capacitor.
(2) Direct contact with water, salt water, or oil.
(3) High humidity conditions where water could condense on the capacitor.
(4) Exposure to toxic gases such as hydrogen sulfide, sulfuric acid, nitric acid, chlorine, Chlorine compound, Bromine, Bromine compound or ammonia.
(5) Exposure to ozone, radiation, or ultraviolet rays.
(6) Vibration and shock conditions exceeding specified requirements.

6. Capacitor Disposal

When disposing capacitors, use one of the following methods.

(1) Incinerate after crushing the capacitor or puncturing the can wall (to prevent explosion due to internal pressure rise).
(2) Dispose as solid waste.

NOTE : Local laws may have specific disposal requirements which must be followed.