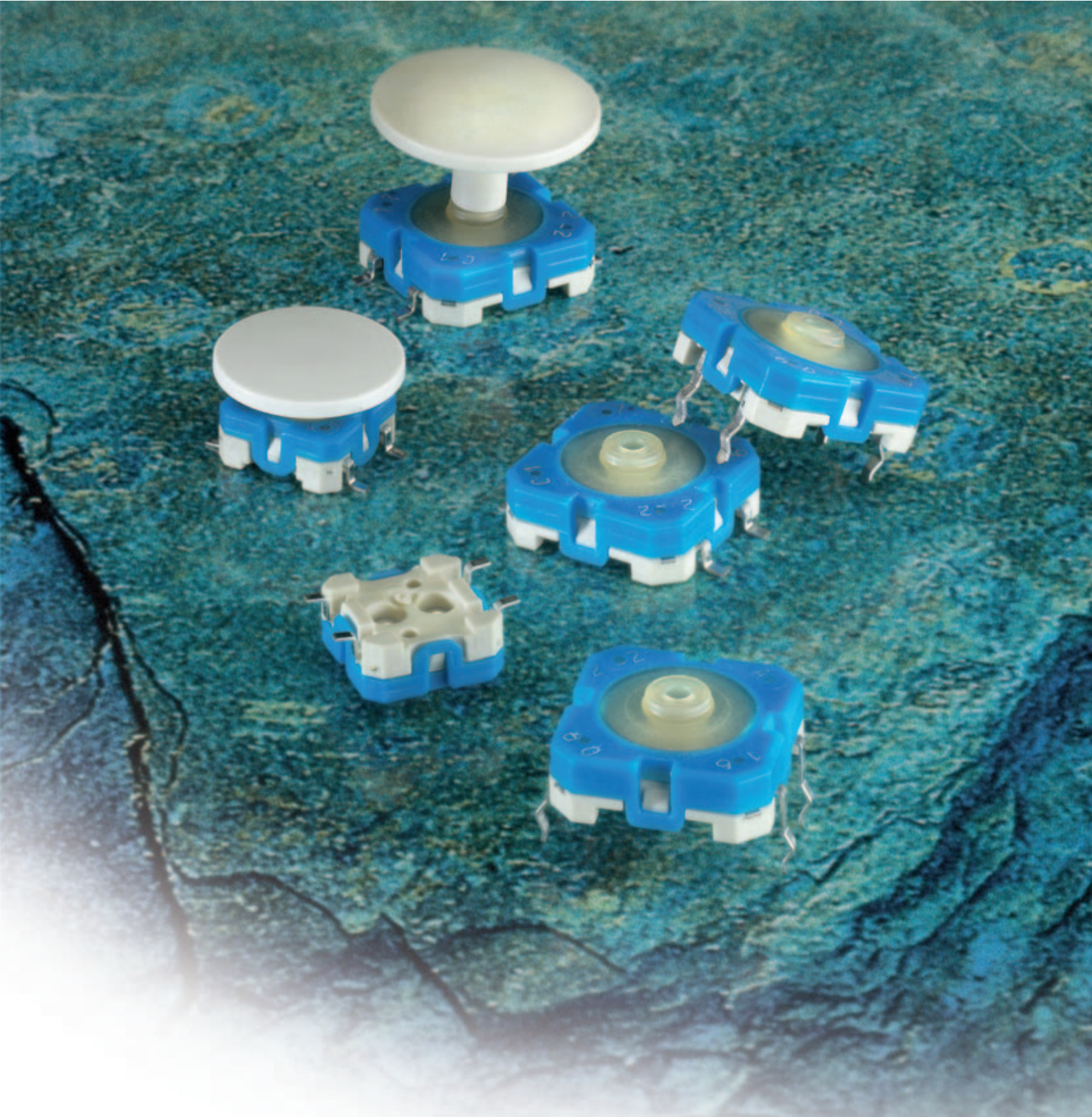

RACON 8/12

Short-Travel PCB Keyswitches

Rafi GmbH & Co. KG
Elektrotechnische Spezialfabrik

RAFI

RACON 8		Order no.	Type code	Dimensions
Solder terminal for PCB, outward	(1) 	1.14.100.501/0000 Packing: in tubes à 60 pcs.	A 1	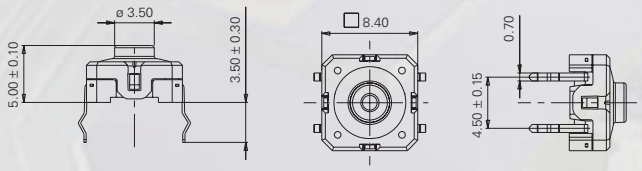
Solder terminal for PCB, inward	(2) 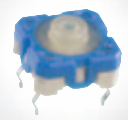	1.14.100.502/0000 Packing: in tubes à 60 pcs.	B 1	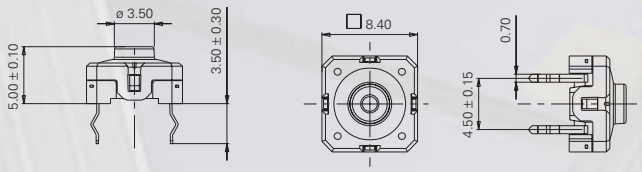
SMD gullwing (Z) terminal	(3) 	1.14.100.503/0000 Packing: Blister reel à 1000 pcs.	C 1	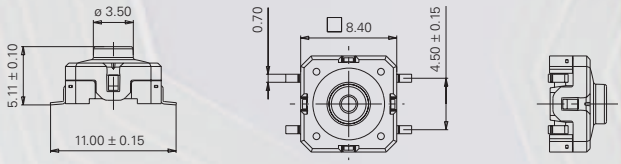

The PCB mounted RACON 8 are extremely reliable key-switches with little space requirements. They are suitable for mounting individually in any position, for arrangement in rows and for key blocks. For use under overlay we recommend to use plungers (see page 9).

- Suitable for most common soldering techniques
  - Solder terminal versions: wave solder bath
  - SMD-versions: reflow soldering
  - Manual soldering
- SMD version (3) can be mounted with automatic SMD assembly machines

Mechanical construction

Contact system:	Snap-action contact, gold - gold
Contact arrangement:	1 normally-open contact
Fixing:	By soldering
Terminals:	Tin-plated
Flammability of plastic materials:	UL 94 HB

Mechanical characteristics

Operating force: (Other operating forces on request)	$2.5^{+0.7/-0.5}$ N
Switching travel:	$0.6^{\pm 0.2}$ mm
Robustness of actuator:	≤ 100 N

Electrical characteristics

Ratet voltage:	0.02…42 V AC/DC
Rated current:	0.01…100 mA
Rated power:	max. 1 W (Ohmic load)
Contact resistance:	< 100 mΩ (when new)
Bouncing time:	< 5 ms
Insulation resistance:	> 10^9 Ω

Further details

Ambient temp., operating:	– 40° C…+ 80° C
Environment conditions:	
– Constant environment acc. to IEC 68-2-3 und 2-30	
– Variable environment acc. to IEC 68-2-14 und 2-33	
Solder heat resistance / solderability:	(1) and (2) acc. to DIN IEC 600 68-2-20; (3) acc. to EN 61760-1 and DIN IEC 600 68-2-58
Operating life at R_T = 23° C and testing force = 1.5 x rated force:	10^6 operations

Product legending / Type code

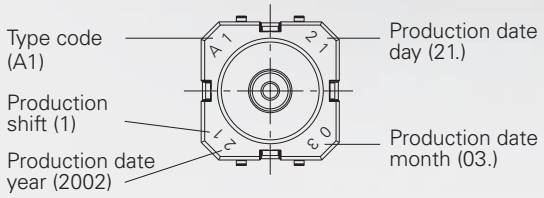

RACON 8 Typical system assembly with plunger under overlay

Solder terminal for PCB, outward

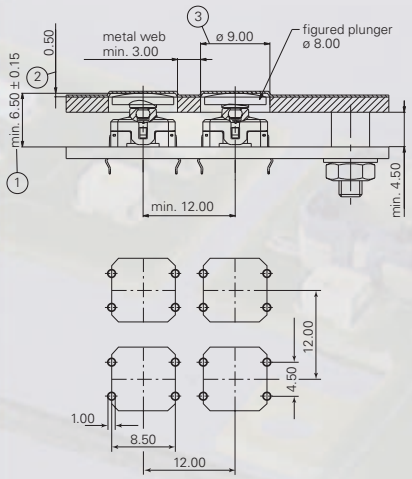

Solder terminal for PCB, inward

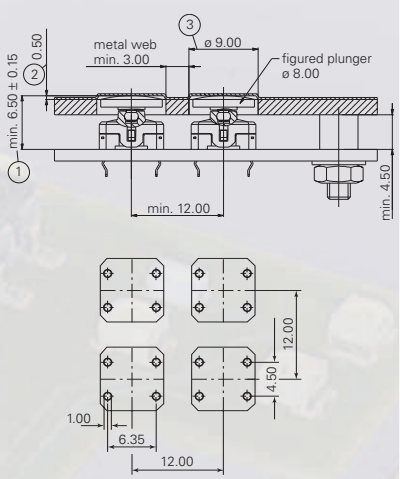

SMD gullwing (Z) terminal

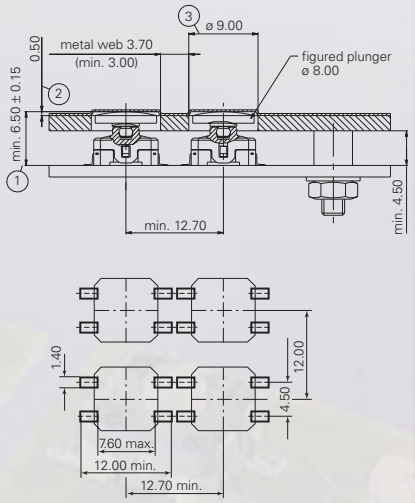

Explanation:

1 Overall height = RACON + plunger
2 Recommended area embossing 0.35 mm at glue spacer thickness of 0.15 mm
3 Front panel cut out = plunger diameter + 1 mm

Hole pattern /pad sizes RACON 8 (smallest grid)

Solder terminal for PCB, outward

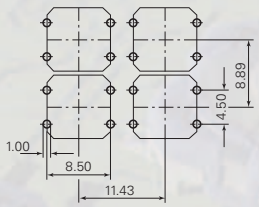

Solder terminal for PCB, inward

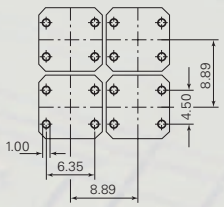

SMD gullwing (Z) terminal

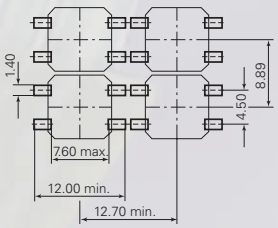

Typical force/travel diagram RACON 8

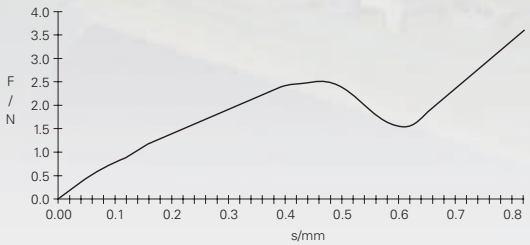

Circuit diagram RACON 8

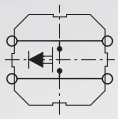

Switching symbols acc. to
IEC 617 form X (twice interrupting)

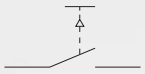

	RACON 12	Order no.	Type code	Dimensions
Solder terminal for PCB, outward	(1) 	1.14.001.501/0000 Packing: in tubes à 45 pcs.	A 1	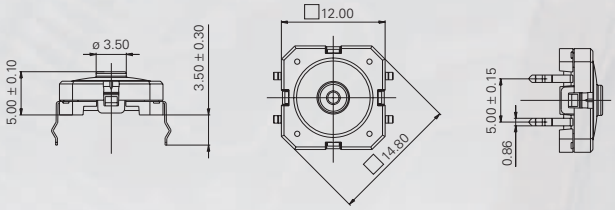
Solder terminal for PCB, inward	(2) 	1.14.001.502/0000 Packing: in tubes à 45 pcs.	B 1	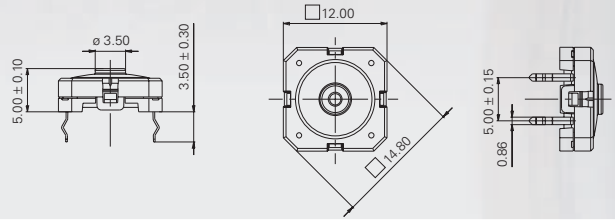
SMD gullwing (Z) terminal	(3) 	1.14.001.503/0000 Packing: Blister reel à 750 pcs.	C 1	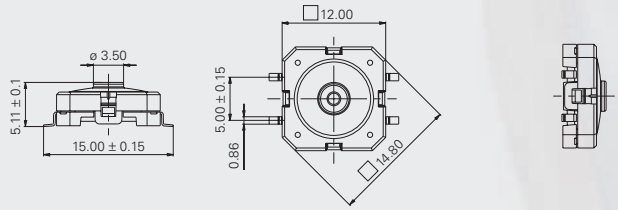

The PCB mounted RACON 12 are extremely reliable key-switches with little space requirements. They are suitable for mounting individually in any position, for arrangement in rows and for key blocks. For use under overlay we recommend to use plungers (see page 9).

- Suitable for most common soldering techniques
  - Solder terminal versions: wave solder bath
  - SMD-versions: reflow soldering
  - Manual soldering
- SMD version (3) can be mounted with automatic SMD assembly machines

Mechanical construction

Contact system:	Snap-action contact, gold - gold
Contact arrangement:	1 normally-open contact
Fixing:	By soldering
Terminator:	Tin-plated
Flammability of plastic materials:	UL 94 HB

Mechanical characteristics

Operating force: (Other operating forces on request)	$3.5^{+0.7/-0.5}$ N
Switching travel:	$0.8^{\pm 0.2}$ mm
Robustness of actuator:	≤ 100 N

Electrical characteristics

Ratet voltage:	0.02…42 V AC/DC
Rated current:	0.01…100 mA
Rated power:	max. 1 W (Ohmic load)
Contact resistance:	< 100 mΩ (when new)
Bouncing time:	< 5 ms
Insulation resistance:	> 10^9 Ω

Further details

Ambient temp., operating:	– 40° C…+ 80° C
Environment conditions:	
– Constant environment acc. to IEC 68-2-3 und 2-30	
– Variable environment acc. to IEC 68-2-14 und 2-33	
Solder heat resistance / solderability:	(1) and (2) acc. to DIN IEC 600 68-2-20; (3) acc. to EN 61760-1 and DIN IEC 600 68-2-58
Operating life at R_T = 23° C and testing force = 1.5 x rated force:	10^6 operations

Product legending / Type code

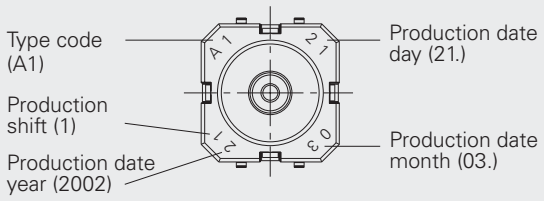

RACON 12 Typical system assembly with plunger under overlay, smallest grid

Solder terminal for PCB, outward

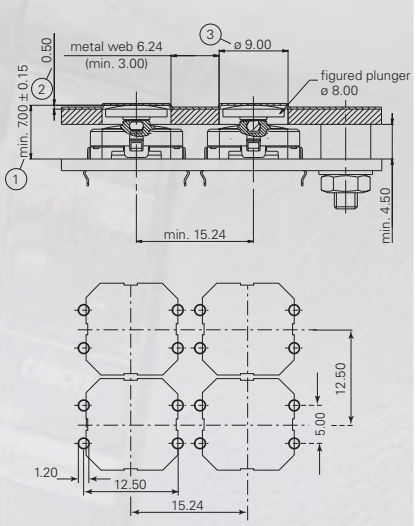

Solder terminal for PCB, inward

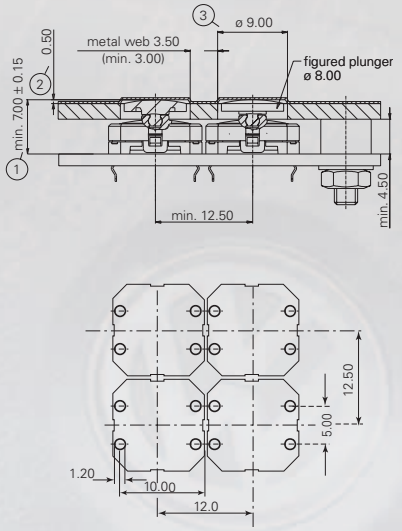

SMD gullwing (Z) terminal

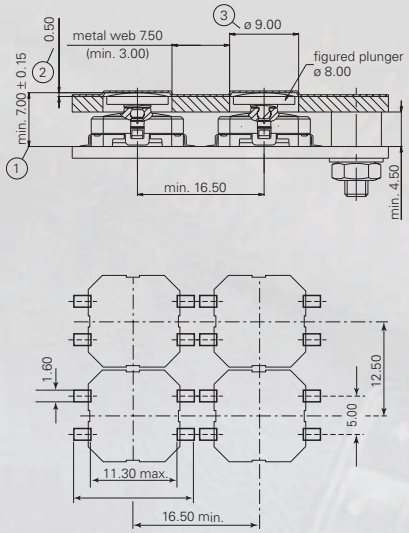

Explanation:

1 Overall height = RACON + plunger
2 Recommended area embossing 0.35 mm at glue spacer thickness of 0.15 mm
3 Front panel cut out = plunger diameter + 1 mm

Typical force/travel diagram RACON 12

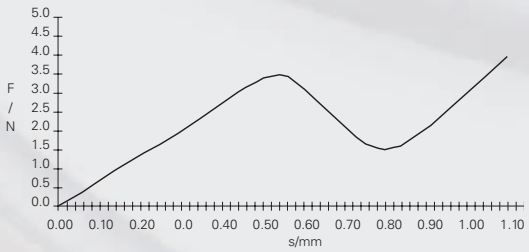

Circuit diagram RACON 12

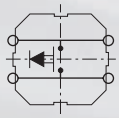

Switching symbols acc. to
IEC 617 form X (twice interrupting)

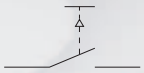

RACON 12 i	Illumination	Terminal	Colour of LED / lens	Order no.
Overall height 9.7 mm  Packing: in tubes à 45 pcs.	Fully illuminated 2 LEDs	Solder terminal for PCB, outward	red / red	1.14.001.551/0000
			green / green	1.14.001.552/0000
			yellow / yellow	1.14.001.553/0000
			yellow / orange	1.14.001.554/0000

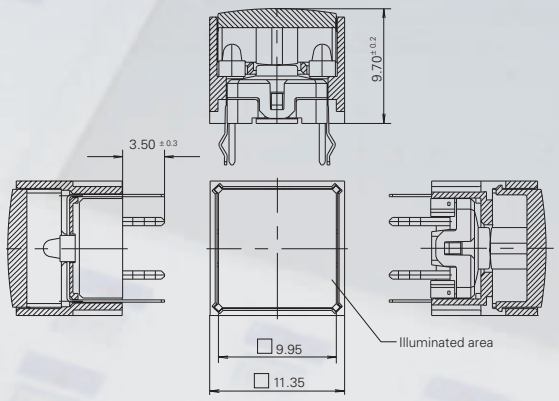

Drilling hole diagram

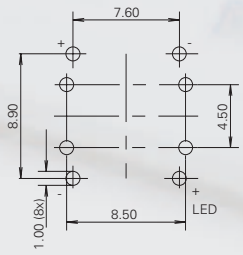

Mechanical construction

Contact system:	Snap-action contact, gold - gold
Contact arrangement:	1 normally-open contact
Fixing:	By soldering
Illumination:	2 LEDs (Fully illuminated)
Terminals:	Tin-plated
Flammability of plastic materials:	UL 94 HB

Mechanical characteristics

Operating force: (Other operating forces on request)	$2.5^{+0.7/-0.5}$ N
Switching travel:	$0.6^{\pm 0.2}$ mm
Robustness of actuator:	≤ 100 N

Electrical characteristics

Rated voltage:	0.02…42 V AC/DC
Rated current:	0.01…100 mA
Rated power:	max. 1 W (Ohmic load)
Contact resistance:	< 100 mΩ (when new)
Bouncing time:	< 5 ms
Insulation resistance:	> 10^9 Ω
Dielectric strength:	> 750 V AC

Further details

Ambient temp., operating:	– 40° C…+ 80° C
Environment conditions:	
– Constant environment IEC 68-2-3 und 2-30	
– Variable environment IEC 68-2-14 und 2-33	
Solder heat resistance / solderability:	nach DIN IEC 600 68-2-20
Operating life at R_T = 23° C and testing force = 1.5 x rated force:	10^6 operations

Hints for application

Low-profile keyboards with RACON 12 i elements are normally constructed with 15.24 mm grid spacing. With this grid, metal webs remain on the front panel between the individual keyswitches, onto which the overlay can be glued. In this case, we recommend area embossing for the overlay above the keyswiches.
For combination with keycaps we recommend to use key caps RK 90 9 x 9 mm.

RACON 12 i, flat data entry system with metal webs

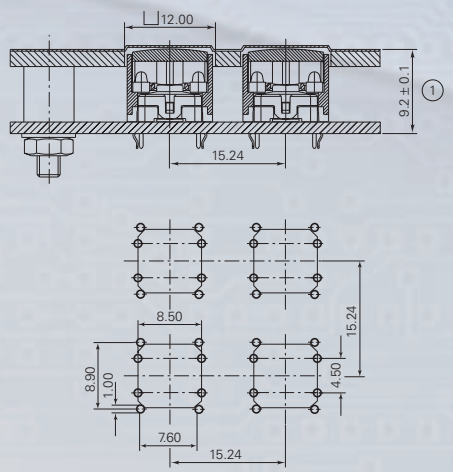

RACON 12 i, flat data entry system, smallest grid

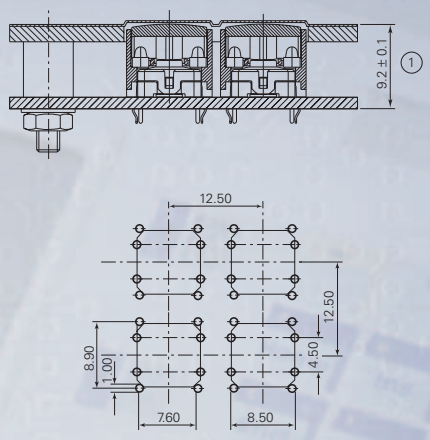

Explanation:
1 Recommended area embossing 0.35 mm at glue spacer thickness of 0.15 mm.

Typical force / travel diagram RACON 12 i

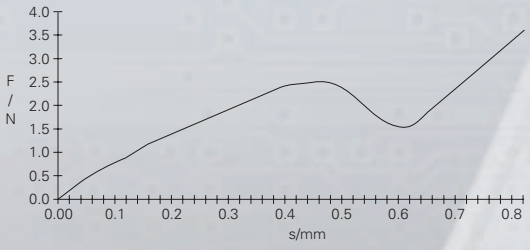

Circuit diagram RACON 12 i

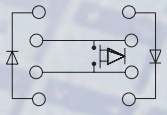

Switching symbols acc. to
IEC 617 form X (twice interrupted)

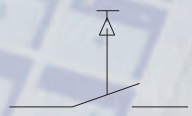

Electrical specifications of LEDs

(valid for 25° C)	LED red	LED green	LED yellow
Max. forward current I_F:	30 mA	30 mA	50 mA
Current reduction from T_0 = 50° C:	0.5 mA/° C	–	0.8 mA/° C
Light current f_v/I_F typ.:	–	–	250 mlm / 20 mA
Wavelength typ.:	637 nm	510 – 545 nm	590 nm
Forward voltage U_F / I_F typ.:	1.8 V / 20 mA	3.5 V / 20 mA	1.9 V / 20 mA
Reverse voltage U_R / I_F:	min. 5 V / 100 µA	–	min. 5 V / 100 µA

Calculating the series resistor:

$$R_v = \frac{U_B - U_F}{I_F}$$

Example for 5 Volt: $R_v = \frac{5\,V - 2.0\,V}{0.02\,A} = 150\,\Omega$ (= standard value)

Rated power of series:

$$P_v = I_F^2 \times R_v$$

RACON 12 V with vertical adapter	Type code	Order no.
 Packing: in boxes à 100 pcs.	F 1	1.14.001.505/0000

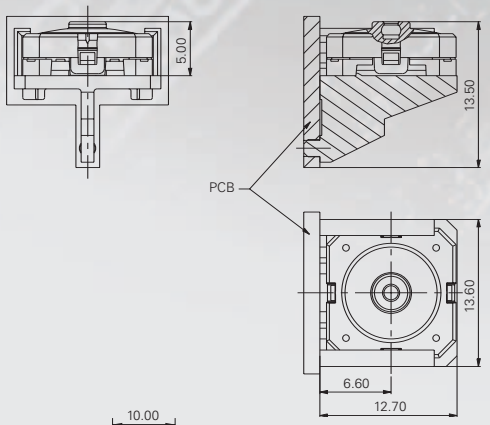

Drilling hole diagram

Hatched areas:
In this area no components and no conductor tracks

The version RACON 12 V can be used for example in PC slot boards and in the measurement and control engineering. By means of a vertical adapter (supporting corner) the RACON switches can be mounted in an angle of 90° to the PCB.
The vertical adapter absorbs the operating forces so that no pressure is exerted on the soldered terminals. For this kind of fixing the switches are supplied with two horizontal terminals on one side.
Plungers see page 9. The plungers for overall height of 6,5 mm may not be used.

Circuit diagram RACON 12 V

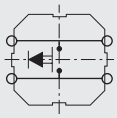

Product legending / Type code

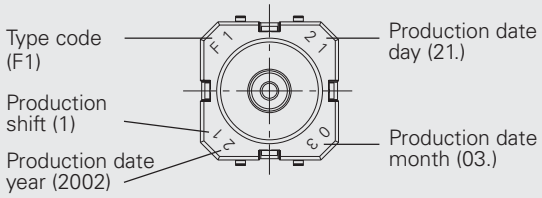

Typical force / travel diagram RACON 12 V

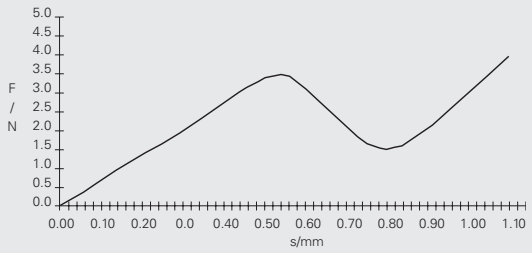

Mechanical construction

Contact system:	Snap-action contact, gold - gold
Contact arrangement:	1 normally-open contact
Fixing:	By soldering
Terminals:	Tin-plated
Flammability of plastic materials:	UL 94 HB

Mechanical characteristics

Operating force: (Other operating forces on request)	$3.5^{+0.7/-0.5}$ N
Switching travel:	$0.8^{\pm 0.2}$ mm
Robustness of actuator:	≤ 100 N

Electrical characteristics

Rated voltage:	0.02…42 V AC/DC
Rated current:	0.01…100 mA
Rated power:	max. 1 W (Ohmic load)
Contact resistance:	< 100 mΩ (when new)
Bouncing time:	< 5 ms
Insulation resistance:	> 10^9 Ω

Further details

Ambient temp., operating:	– 40° C…+ 80° C
Ambient temp., storage:	– 50° C…+ 85° C
Environment conditions:	
– Constant environment acc. to IEC 68-2-3 und 2-30	
– Variable environment acc. to IEC 68-2-14 und 2-33	
Solder heat resistance / solderability:	nach DIN IEC 600 68-2-20
Operating life at R_T = 23° C and testing force = 1.5 x rated force:	10^6 operations

Plunger	Borehole in front-panel	Order no. for overall height			
		6.5 mm	7.0 mm	9.7 mm	12.5 mm
(1) ø 8 mm 	ø 9 mm	5.46.167.301/0209	5.46.167.090/0209	5.46.167.091/0209	5.46.167.092/0209
(2) ø 11.5 mm 	ø 12.5 mm	5.46.167.227/0209	5.46.167.042/0209	5.46.167.043/0209	5.46.167.044/0209
(3) ø 14.5 mm 	ø 15.5 mm	5.46.168.227/0209	5.46.168.042/0209	5.46.168.043/0209	5.46.168.044/0209
(4) ø 19 mm 	ø 20 mm	5.46.169.227/0209	5.46.169.042/0209	5.46.169.043/0209	5.46.169.044/0209

Captive plunger	Front-panel cut-out	Order no. for overall height			Suitable for RACON	
		7.0 mm	9.7 mm	12.5 mm	8	12
(5) □ 14 x 14 mm 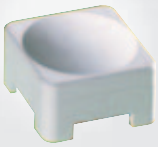	15 x 15 mm	5.46.001.057/0209	5.46.001.058/0209	5.46.001.059/0209	–	x

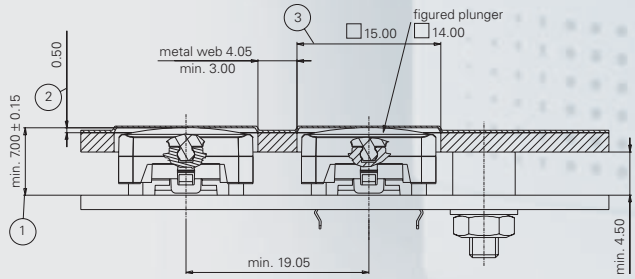

These square keycaps, which snap on to the RACON, cannot be tilted sideways thanks to their geometrical design. This ensures that they remain fixed on the key-switch so that they virtually cannot get lost.

Explanation:
1 Overall height = RACON + plunger
2 Recommended area embossing 0.35 mm at glue spacer thickness of 0.15 mm
3 Front panel cut out = plunger diameter + 1 mm

* Plungers for other overall heights on request.

Keycaps 9 x 9 mm, RK 90

Opaque version* with pressure pad	**Order no.** Keycap 9 x 9 mm, 1-module	**Colour no.**
(1) 	5.04.668.015 / Colour no.	**opaque:** /0700 light grey /0300 red /0500 green /0400 yellow /0600 blue
Transparent version** with pressure pad	**Order no.** Keycap 9 x 9 mm, 1-module	**Colour no.**
(2) 	5.04.668.016 / Colour no.	**transparent:** /1000 colourless /1300 red /1510 green /1400 yellow
	Order no. legend insert 5.70.644.000 / Colour no.	**opaque:** /2000 white

* Laser-printed on request, delivery: assembled
** Delivery in single parts. Please order legend inserts separately (legending on request)
Keycap system for simultaneous action of two RACON 8 or 12 on request.

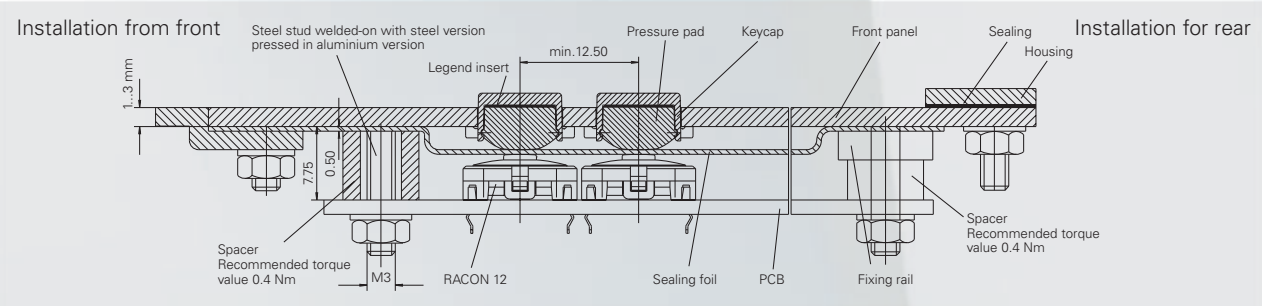

These keycaps enable you to design especially small data entry pads, e.g. for measurement and laboratory devices, which due to their dimensions do not offer much space for the data entry.

With the RK 90 keycaps and the RACON short-travel keyswitches key grids of only 12.5 mm can be realized.

The keycaps can be laser-printed, engraved or printed. In the transparent version insert foils can be inserted.

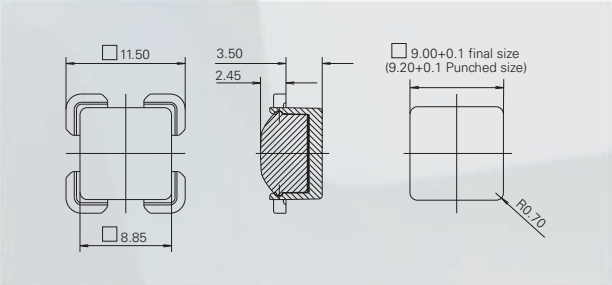

Keycaps 14 x 14 mm, RK 90

Opaque version* with pressure pad	Order no. keycaps 14 x 14 mm				Colour no.
	1-module	1 1/4-module	1 1/2-module	2-module	
(1) 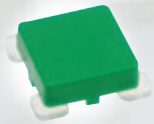	5.04.668.001 /Colour no.	5.04.668.002 /Colour no.	5.04.668.003 /Colour no.	5.04.668.004 /Colour no.	**opaque:** /0700 light grey /0309 red /0514 green /0409 yellow /0611 blue
(2) 	5.04.668.009 /Colour no.	–	–	–	
(3) 	5.04.668.010 /Colour no.	–	–	–	
Transparent version with pressure pad**	**Order no. keycaps 14 x 14 mm**				**Colour no.**
	1-module	**1 1/4-module**	**1 1/2-module**	**2-module**	
(4) 	5.04.668.005 /Colour no.	5.04.668.006 /Colour no.	5.04.668.007 /Colour no.	5.04.668.008 /Colour no.	**transparent:** /1002 colourless /1307 red /1510 green /1403 yellow
(5) 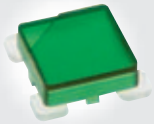	5.04.668.011 /Colour no.	–	–	–	
(6) 	5.04.668.012 /Colour no.	–	–	–	
Legend inserts	5.70.640.000 /Colour no.	5.70.641.000 /Colour no.	5.70.642.000 /Colour no.	5.70.643.000 /Colour no.	**opaque:** /2000 white

* Laser-printed on request, delivery: assembled
** Delivery in single parts. Please order legend inserts separately (legending on request)

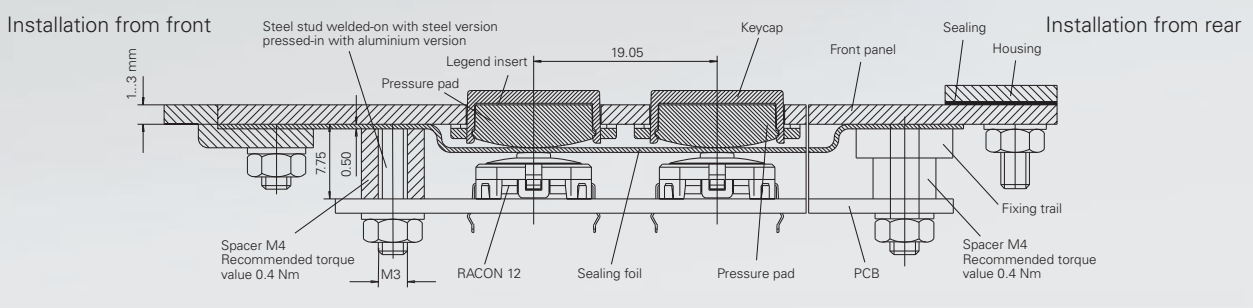

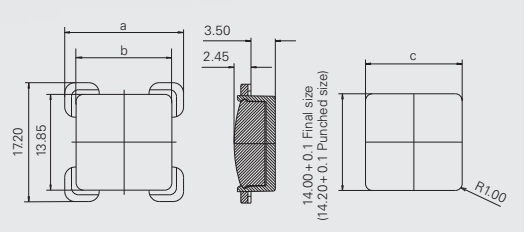

Size	Dimensions in mm		Dimension „c“ in mm	
	a Pressure pad	b Keycap	Hole pattern Final size	Hole pattern Punched size
1-module	17.20	13.85 ±0.05	14.00 +0.1	14.20 +0.1
1 1/4-module	20.70	17.35 ±0.05	17.50 +0.1	17.70 +0.1
1 1/2-module	24.20	20.85 ±0.05	21.00 +0.1	21.20 +0.1
2-module	31.20	27.85 ±0.05	28.00 +0.1	28.20 +0.1

Metal Keycaps 14 x 14 mm

Aluminium Keycaps	Order no. aluminium keycaps 14 x 14 mm				Colour no.
	1-module	1 1/4-module	1 1/2-module	2-module	
(1) 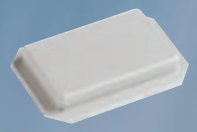	 5.46.500.001 /Colour no.	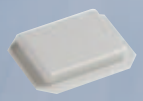 5.46.500.002 /Colour no.	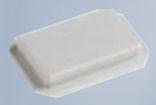 5.46.500.003 /Colour no.	 5.46.500.004 /Colour no.	colourlessly anodized /4010

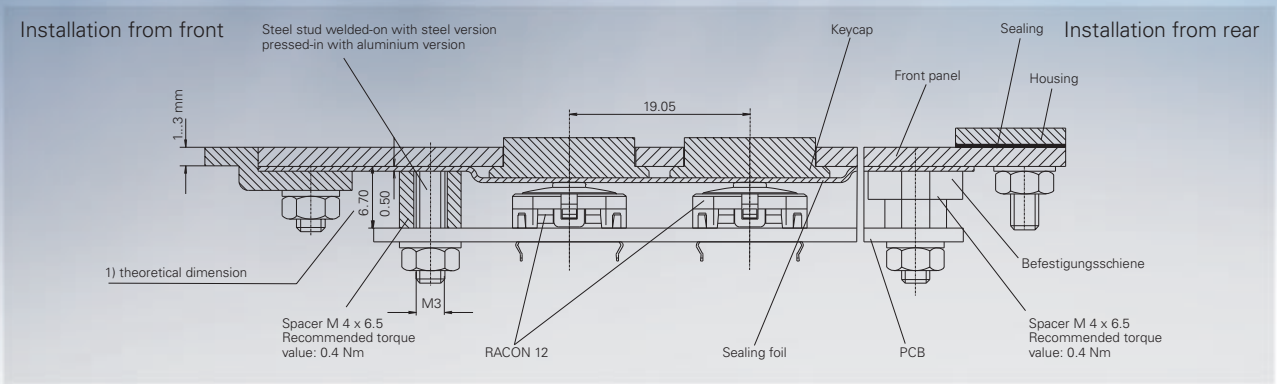

03/2003

The short-travel keyboard RK 90 with metal keycaps proves to be largely safe from mechanical, thermic and chemical damages. In combination with a metal front panel this data entry system offers the best protection against vandalism. Below the metal keycaps the approved RF 15/19 or RACON switches can be used.

The keycaps can be engraved or anodized in different colours and laserprinted. This means the legending is durable and can be neither dissolved mechanically nor chemically.

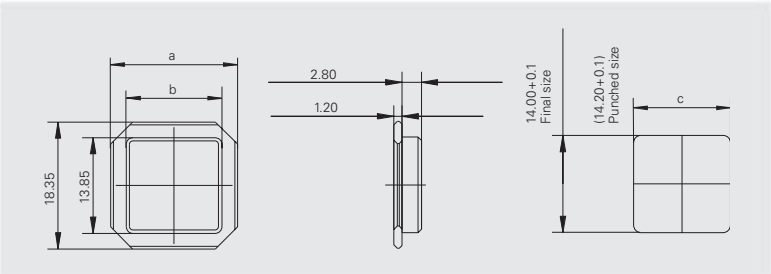

Size	Dimensions in mm		Dimension „c“ in mm	
	a	b	Hole pattern Final size	Hole pattern Punched size
1-module	18.35	13.85 ±0.05	14.00 +0.1	14.20 +0.1
1 1/4-module	21.85	17.35 ±0.05	17.50 +0.1	17.70 +0.1
1 1/2-module	25.35	20.85 ±0.05	21.00 +0.1	21.20 +0.1
2-module	32.35	27.85 ±0.05	28.00 +0.1	28.20 +0.1

Rafi GmbH & Co. KG
Elektrotechnische Spezialfabrik

P.O. Box 2060, D-88190 Ravensburg
Phone +49-7 51-89-0, Fax +49-7 51-89-1300
www.rafi.de, email: info@rafi.de